GLOBAL
MANUFACTURING
SOLUTIONS

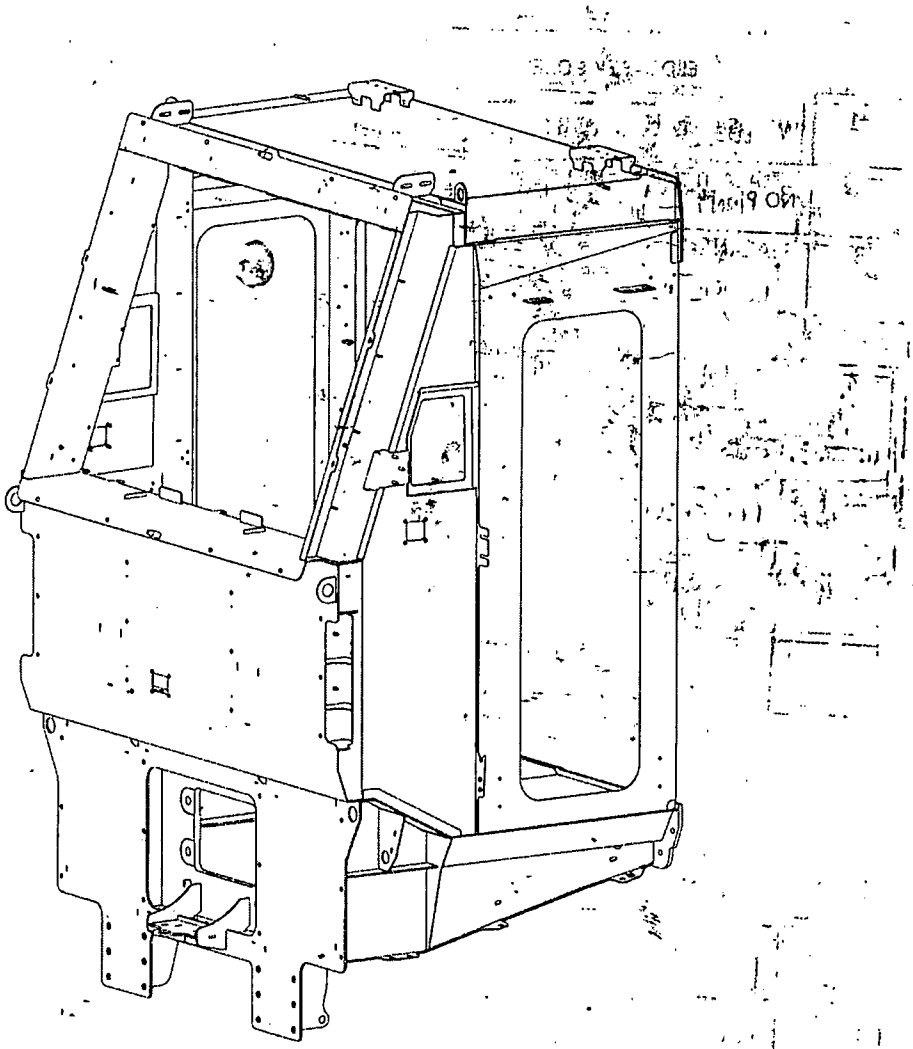

CABIN STRUCTURE QUALITY CARD

CAB No.: CAB 4 4 8

WEIGHT: 1 4 8 5 Kg

RAW MATERIAL TRACEABILITY

GRADE	MATERIAL THICKNESS	SUPPLIER	DATE RECEIVED	BATCH NUMBER	PO NUMBER	TRAINSET NUMBER(S)
RCS 355	2 mm	Pegasus	5/02/24	178247 104825 01	CP49402	
RCS 355	2 mm					
RCS 355	2 mm					

GRADE	MATERIAL THICKNESS	SUPPLIER	DATE RECEIVED	BATCH NUMBER		TRAINSET NUMBER(S)
RCS 355	3 mm	Pegasus	14/02/24	178820 104640 01	F205272	
RCS 355	3 mm					
RCS 355	3 mm					

GRADE	MATERIAL THICKNESS	SUPPLIER	DATE RECEIVED	BATCH NUMBER		TRAINSET NUMBER(S)
RCS 355	20 mm	Pegasus	28/02/24	178485 104640 01	P300091	
RCS 355	20 mm					

GRADE	MATERIAL THICKNESS	SUPPLIER	DATE RECEIVED	BATCH NUMBER		TRAINSET NUMBER(S)
RCS 355	30 mm	Pegasus	12/02/24			
RCS 355	30 mm					

GRADE	MATERIAL THICKNESS	SUPPLIER	DATE RECEIVED	BATCH NUMBER		TRAINSET NUMBER(S)
RCS 450	4 mm	Pegasus	8/02/24	178489 104640	VHC35578	
RCS 450	4 mm					
RCS 450	4 mm					
RCS 450	4 mm					

GRADE	MATERIAL THICKNESS	SUPPLIER	DATE RECEIVED	BATCH NUMBER		TRAINSET NUMBER(S)
RCS 450	6 mm	Pegasus	14/02/24	179569 104640 01	F207908 VHC28402	
RCS 450	6 mm					
RCS 450	6 mm					

GRADE	MATERIAL THICKNESS	SUPPLIER	DATE RECEIVED	BATCH NUMBER		TRAINSET NUMBER(S)
RCS 450	8 mm	Pegasus	22/11/23	179569 192206 01	F207406 VHC58432	
RCS 450	8 mm					
RCS 450	8 mm					
RCS 450	8 mm					

Cabin Roof Assembly: GN002839					
Assembly Completed as per WI/SOS MD_0046		Confirmed	Yes	✓	No
Operator:	DYLAN DAVIDS	Assembly Date:	2024/02/28		
Sign:		Wire Batch No.:	107238201		

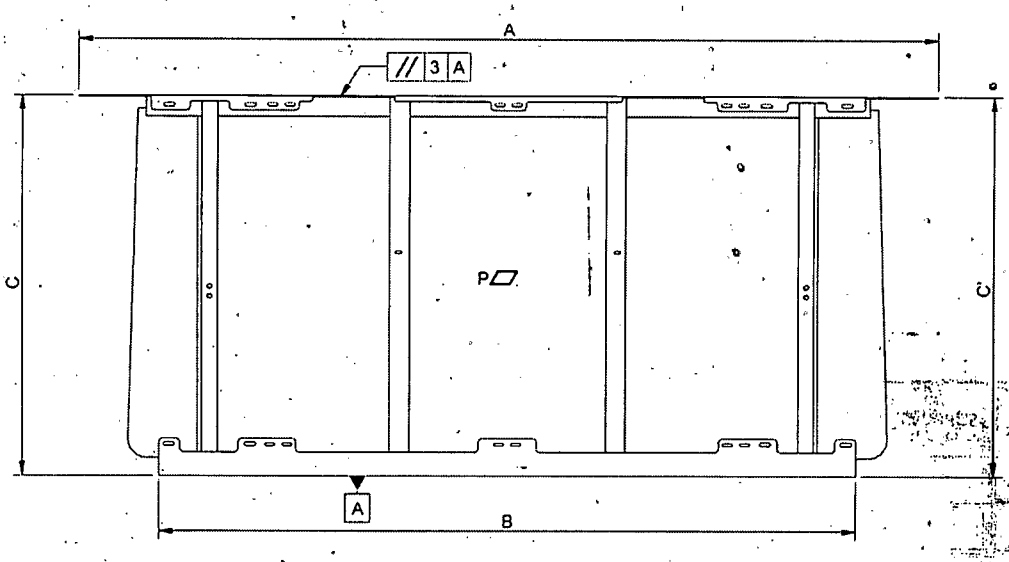

Welding Control					
Visual inspection of all Welds as per Drawing and EN ISO 5817 / EN ISO 10042		Confirmed	Yes	✓	No
QC Inspector:	LEON	Sign:		Date:	2024/02/28

Dimensional Control						
Rep		Toler.	Dimension measured		Measuring Equipment	Observations
A	2216	+5/-0	2216		Tape Measure	Acceptable
B	1800	± 4	1800			Acceptable
C	976	+2/-3	977	978		Acceptable
QC Inspector:	LEON		Sign:		Date:	2024/02/28

Geometrical Control					
Nature of Checks		Dimension Measured	Measuring Equipment	Observations	
Planeity P	6 mm		Ruler		
//	3	A	Passed	Set Square	Acceptable
QC Inspector:	LEON	Sign:		Date:	2024/02/28

Cabin Front Frame Assembly: GN002840

Assembly Completed as per WI/SOS MD_0047		Confirmed	Yes	✓	No
Operator:	Bambolo Gcinani	Assembly Date:	2024/02/28		
Sign:		Wire Batch No.:	22021S2		

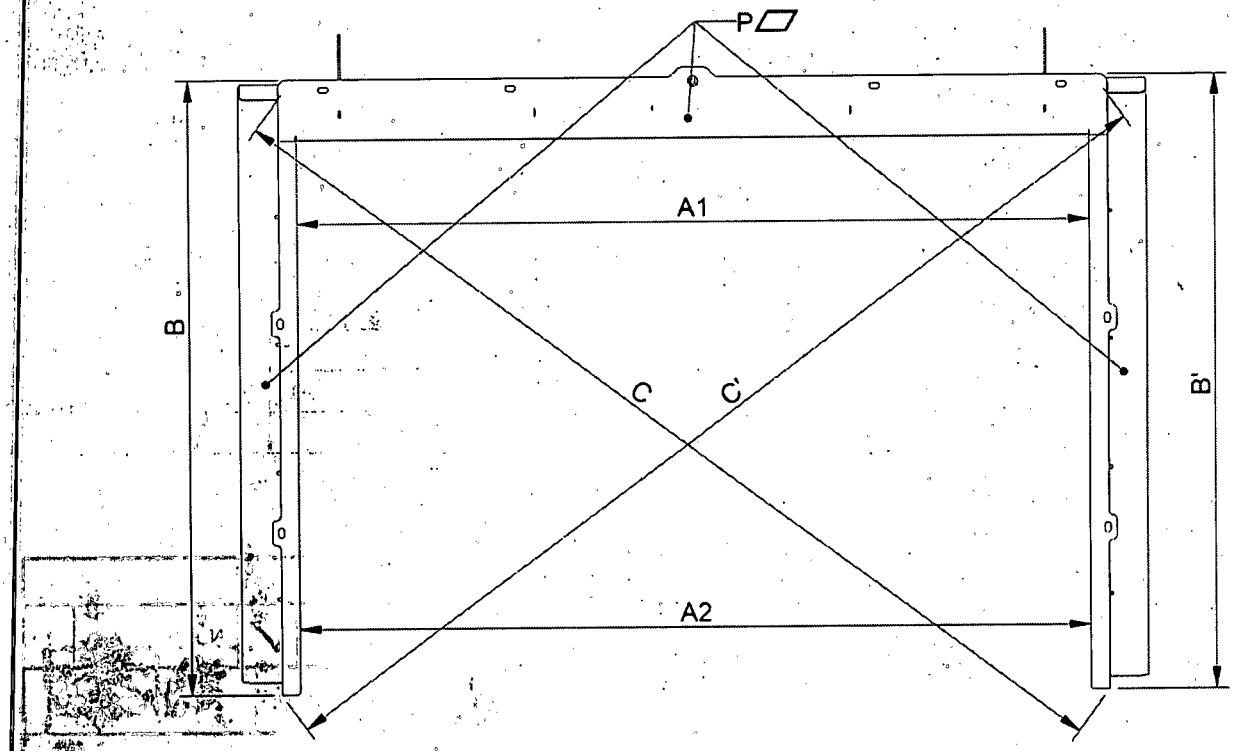

Welding Control

Visual inspection of all Welds as per Drawing and EN ISO 5817 / EN ISO 10042		Confirmed	Yes	✓	No
QC Inspector:	LEON	Sign:		Date:	2024/02/28

Dimensional Control

Rep	Theorical Dim	Toler.	Dimension Measured		Measuring Equipment	Observations
A1	1910	± 2	1912		Tape Measure	Acceptable
A2	1910		1911			Acceptable
B	1475	± 1	1475	1475		Acceptable
C	Diagonals |C - C'| ≤ 3		2478	2475		Acceptable
QC Inspector:	LEON		Sign:		Date:	2024/02/28

Geometrical Control

Nature of checks		Dimension Measured	Measuring Equipment	Observations
P : Planeity	4 mm	Passed	Ruler	Acceptable
QC Inspector:	LEON	Sign:		Date: 2024/02/28

Cabin LHS/RHS Wing Mirror Plate Assembly: GN002846/GN002844					
Assembly Completed as per WI/SOS MD_0068_0073		Confirmed	Yes	✓	No
Operator:	Xavier	Assembly Date:	2024/02/20		
Sign:		Wire Batch No.:	2202152		

Cabin LHS/RHS Cantrail Assembly: GN002924/GN002907					
Assembly Completed as per WI/SOS MD_0065_0066		Confirmed	Yes	✓	No
Operator:	Glenn	Assembly Date:	2024/02/19		
Sign:		Wire Batch No.:	2202152		

Cabin LHS/RHS Door Post Assembly: GN002919/GN002897					
Assembly Completed as per WI/SOS MD_0067_0078		Confirmed	Yes	✓	No
Operator:	Glenn	Assembly Date:	2024/02/19		
Sign:		Wire Batch No.:	2202152		

Cabin LHS/RHS Door Frame Assembly: GN002839

Assembly Completed as per WI/SOS MD_0067_0078		Confirmed	Yes	✓	No
Operator:	Glenn	Assembly Date:	2024/02/20		
Sign:	Eddie	Wire Batch No.:	2202152		

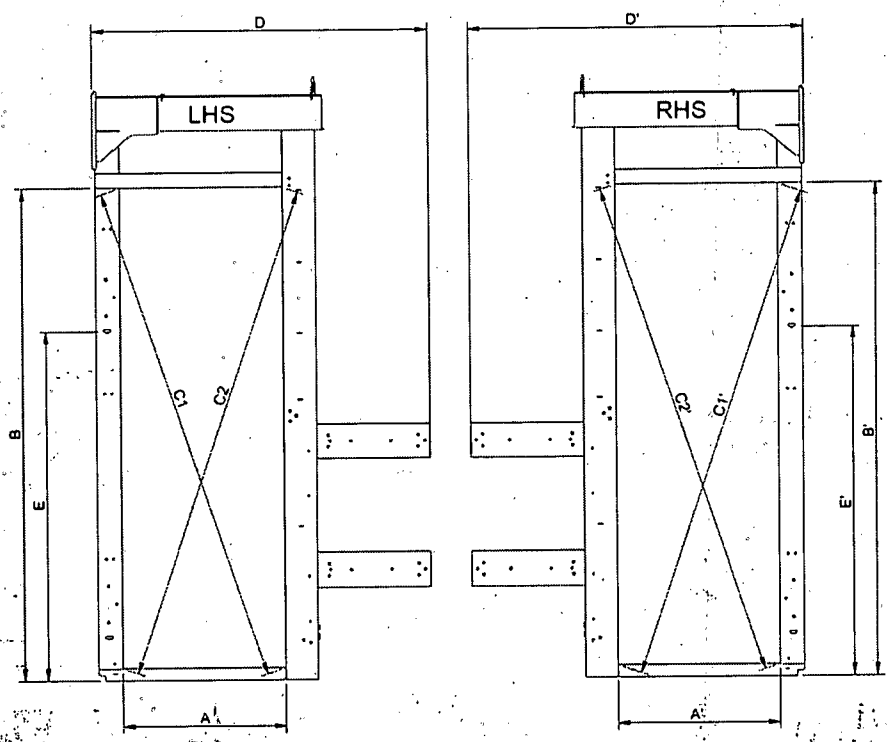

Welding Control

Visual inspection of all Welds as per Drawing and EN ISO 5817 / EN ISO 10042		Confirmed	Yes	✓	No
QC Inspector:	Ridley	Sign:		Date:	2024/02/20

Dimensional Control

Rep	Theorical Dim	Toler.	Dimension Measured		Measuring Equipment	Observations
A	695	± 2	697	697	Tape Measure	Acceptable
B	2086	+1/-3	2087	2086		Acceptable
C1 / C2	Difference of diagonals |C1 - C2| ≤ 3		2152	2152		Acceptable
|C1 - C2|			2153	2153		Acceptable
D	1438	+2/-3	1439	1440		Acceptable
E			1480	1482		Acceptable
QC Inspector:	Ridley		Sign:		Date:	2024/02/20

Geometrical Control

Nature of checks		Dimension Measured	Measuring Equipment	Observations	
P1 : planeity of 2 edges	4 mm	Passed	Ruler	Acceptable	
QC Inspector:	Ridley	Sign:		Date:	2024/02/20

Cabin LHS/RHS Side Assembly: GN002838/GN002837					
Assembly Completed as per WI/SOS MD_0044_0045		Confirmed	Yes	✓	No
Operator:	Xander	Assembly Date:	2024/02/22		
Sign:		Wire Batch No.:	2202152		

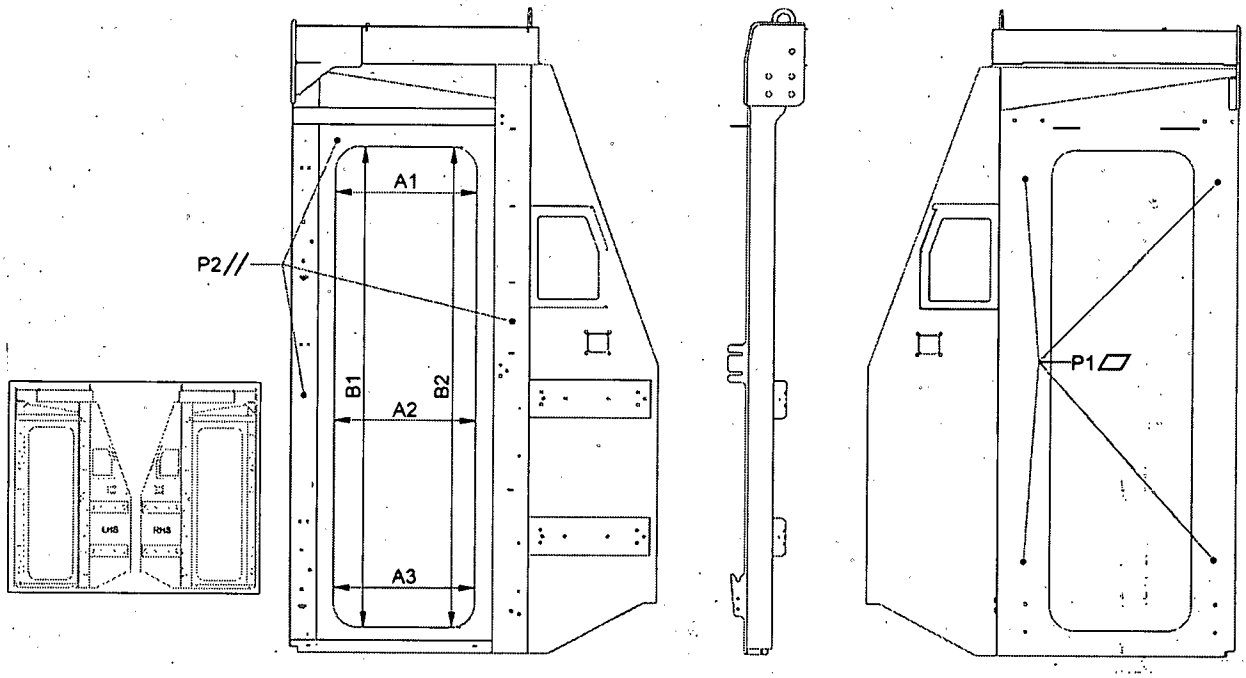

Welding Control					
Assembly Completed as per WI/SOS MD_0044_0045		Confirmed	Yes	✓	No
QC Inspector:	Leon	Sign:		Date:	2024/02/28

Dimensional Control						
Rep	Theorical Dim	Toler.	Dimension Measured		Measuring Equipment	Observations
A1	560	± 2	558	558	Tape Measure	Acceptable
A2			560	559		Acceptable
A3			560	560		Acceptable
B1	1900	± 2	1898	1898		Acceptable
B2			1898	1898		Acceptable
QC Inspector:	Leon		Sign:		Date:	2024/02/28

Geometrical Control					
Nature of checks		Dimension Measured	Measuring Equipment	Observations	
P1 : Planeity	4 mm	Passed	Ruler	Acceptable	
P2 : Planeity	2 mm	Passed	Ruler	Acceptable	
QC Inspector:		Sign:		Date:	2024/02/28

Cabin Shield Assembly: GN002836

Assembly Completed as per WI/SOS MD_0043		Confirmed	Yes	✓	No
Operator:	BEVAN / DAUENHILL	Assembly Date:	2024/02/28		
Sign:		Wire Batch No.:	552053		

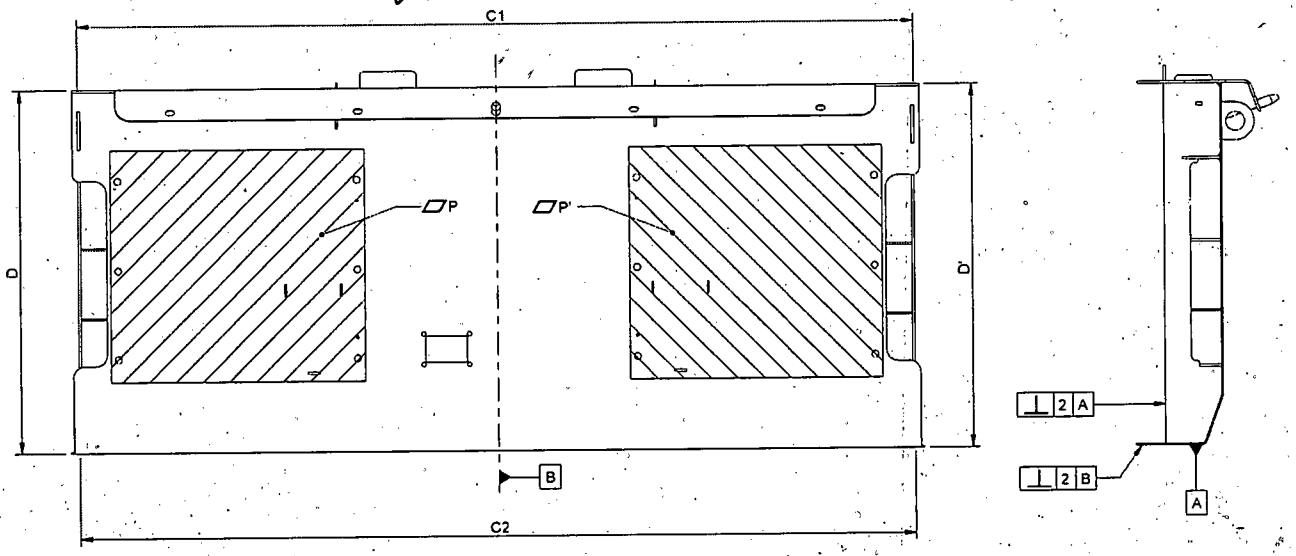

Welding Control

Assembly Completed as per WI/SOS MD_0043		Confirmed	Yes	✓	No
QC Inspector:	LEON	Sign:		Date:	2024/02/28

Dimensional Control

Rep	Theorical Dim	Toler.	Dimension measured		Measuring Equipment	Observations
C1 / C2	2210	± 4	2214	2212	Tape Measure	Acceptable
D / D'	956	± 2	956	955		Acceptable
QC Inspector:	LEON		Sign:		Date:	2024/02/28

Geometrical Control

Nature of Checks				Dimension Measured		Measuring Equipment	Observations
Planeity P / P'			2 mm			Ruler	
Perpendicularity		2	A	Passed		Set Square	Acceptable
		2	B	Passed		Set Square	Acceptable
QC Inspector:	LEON			Sign:		Date:	2024/02/28

Cabin Front Headstock Assembly: GN002841

Assembly Completed as per WI/SOS MD_0019		Confirmed	Yes	✓	No
Operator:		Assembly Date:	2024/02/23		
Sign:		Wire Batch No.:	2202452		

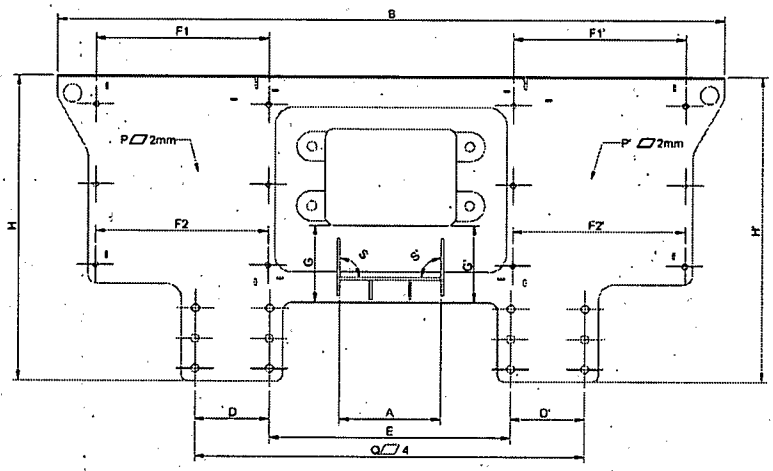

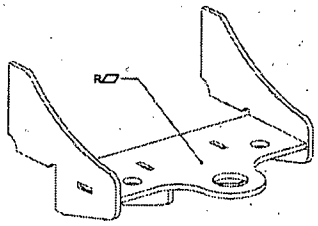

Welding Control

Visual inspection of all Welds as per Drawing and EN ISO 5817 / EN ISO 10042		Confirmed	Yes	✓	No
QC Inspector:	Leon	Sign:		Date:	2024/02/26

Dimensional Control

Rep	Theorical Dim	Toler.	Dimension Measured		Measuring Equipment	Observations
A	340	± 1	339		Tape Measure	Acceptable
B	2240	± 4	2244			Acceptable
D / D'	250	± 1	250.5	250.5		Acceptable
E	808	± 2	808			Acceptable
F1 / F1'	580	± 1	581	581		Acceptable
F2 / F2'			581	581		Acceptable
G / G'	258	± 1	259	258		Acceptable
H / H'	1019	± 2	1000	1000		Acceptable
QC Inspector:	Leon		Sign:		Date:	2024/02/26

Geometrical Control

Nature of checks		Dimension Measured		Measuring Equipment	Observations
O: *Planeity of global assembly*	4 mm	Passed		Ruler	Acceptable
P / P': Planeity	2 mm	Passed		Ruler	Acceptable
Q: Planeity Surface of Supports	4 mm			Ruler	Acceptable
R: Planeity Coupler Support	2 mm			Ruler	Acceptable
S: Perpendicularity coupler	1mm			Square	Acceptable
QC Inspector:			Sign:		Date: 2024/02/26

Cabin Underframe Assembly: GN002835

Assembly Completed as per WI/SOS MD_0042		Confirmed	Yes		No
Operator:	Michael Wood	Assembly Date:	20 24/02/28		
Sign:		Wire Batch No.:	22021582		

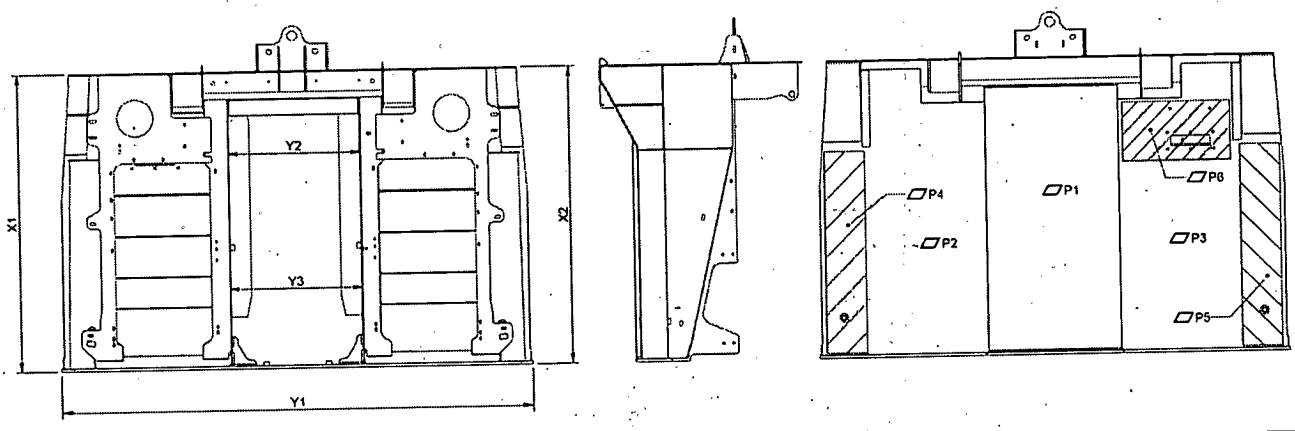

Welding Control

Assembly Completed as per WI/SOS MD_0042		Confirmed	Yes		No
QC Inspector:	LEON	Sign:		Date:	20 24/02/28

Dimensional Control

Rep.	Theorical Dim	Toler.	Dimension Measured		Measuring Equipment	Observations
X1 / X2	1485	+5 / -2	1486	1485	Tape Measure	Acceptable
Y 1	2354	± 3	2352			Acceptable
Y2 / Y3	666	± 1	667	667		Acceptable
QC Inspector:	LEON		Sign:		Date:	20 24/02/28

Geometrical Control

Nature of checks		Dimension Measured		Measuring Equipment	Observations
P1 : Planeity	4 mm	Passed		Ruler	Acceptable
P2 / P3 : Planeity	4 mm	Passed		Ruler	Acceptable
P4 / P5 : Planeity	2 mm	Passed		Ruler	Acceptable
P6 : Planeity	2 mm	Passed		Ruler	Acceptable
QC Inspector:	LEON		Sign:		Date: 20 24/02/28

Cabin Structure Assembly: GN002834

Assembly Completed as per WI/SOS MD_0039		Confirmed	Yes	✓	No	
Operator:	CHARL BLOEM	Assembly Date:	20 24/02/28			
Sign:		Wire Batch No.:	2202152			

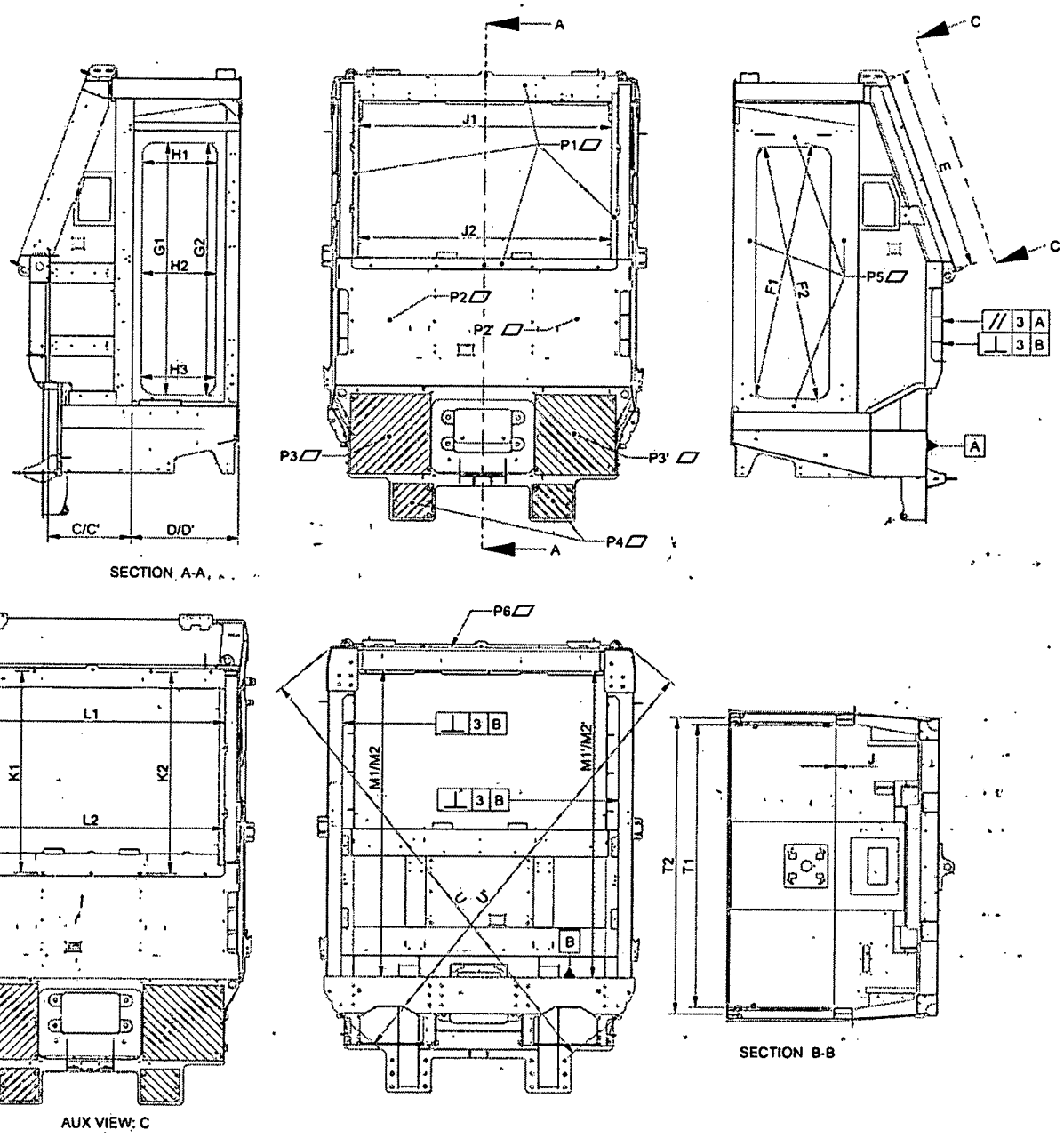

Welding Control

Visual inspection of all Welds as per Drawing and EN ISO 5817 / EN ISO 10042	Confirmed	Yes	✓	No	

QC Inspector:	SBonelo	Sign:		Date:	2024/03/04

Dimensional Control

Rep	Theoretical Dim	Toler.	LHS / Dimension Measured / RHS		Observations
C / C'	625	± 2	625	626	Acceptable
D / D'	813	± 2,5	813	812.	Acceptable
E	1531.5	± 3	1531		Acceptable
G1 / G'1	Height 1900	+1 -3	1898.	1898.	Acceptable
G2 / G'2			1898.	1898	Acceptable
H1 / H'1	Width 560	+1 -3	559.	558.	Acceptable
H2 / H'2			558.	560	Acceptable
H3 / H'3			560.	559.	Acceptable
F1 / F'1	Diagonals 1939		1938.	1937	Acceptable
F2 / F'2			1938	1938	Acceptable
Difference	F1-F2 / F'1-F'2	≤ 4	0	1	Acceptable
J	Gap of Doors	± 1,5	1		Acceptable
K1 / K2	1515	± 3	1516	1515	Acceptable
L1 / L2	1996	± 3	1995	1995	Acceptable
M1 / M'1	2306	± 3	2474	2475	Acceptable
M2 / M'2			2474	2475	Acceptable
T1 / T'1	2130 Top/Bottom	± 3	2130	2130	Acceptable
T2 / T'2	2230 Top/Bottom		2230	2231	Acceptable
Difference	U - U' (3522)	≤ 4mm	3520	3519	Acceptable

QC Inspector:	SBonelo	Sign:		Date:	2024/03/04

Geometrical Control

Nature of checks				Toler.	LHS / Dimension Measured / RHS		
P1 / P'1	Planeity			2 mm	Acceptable	Acceptable	Acceptable
P2 / P'2	Planeity			2 mm	Acceptable	Acceptable	Acceptable
P3 / P'3	Planeity			4 mm	Acceptable	Acceptable	Acceptable
P4 / P'4	Planeity			4 mm	Acceptable	Acceptable	Acceptable
P5 / P'5	Planeity			4 mm	Acceptable	Acceptable	Acceptable
P6 Roof	Planeity			6 With 2m Ruler	Acceptable	Acceptable	Acceptable
Shield	//	3	A	3	Acceptable		Acceptable
Shield	⊥	3	A	3	Acceptable		Acceptable
Door Post	⊥	3	A	Front	Acceptable		Acceptable
				Back	Acceptable		Acceptable

QC Inspector:	SBonelo	Sign:		Date:	2024/03/04

2475 2474

Cabin Bracket Assembly: GN002833						
Assembly Completed as per WI/SOS MD_0091		**Confirmed**	Yes	✓	No	
Operator:	Daniel	Assembly Date:	2024 03 04			
Sign:		Wire Batch No.:	2202152			

Cabin Rivnut Assembly: GN002832						
Assembly Completed as per WI/SOS MD_0092		**Confirmed**	Yes		No	
Operator:	Selwyn	Assembly Date:	20 __/__/__			
Sign:		Wire Batch No.:				

Shot Blasting

Shot Blasting Pre-Inspection

All external threads masked	Confirmed	Yes	✓	No	
Fasteners positioned in all Rivnuts and Bosses	Confirmed	Yes	✓	No	
Masked as per GMS-SOS-GIBELA-CABIN-001	Confirmed	Yes	✓	No	
Operator: DAVID	Sign:				
Date: 2024/04/03					

Record of Shot Blasting

Operator:		Date:	2024/04/03
Start Time:	10 H 02	End Time:	~~65-08%~~ 09 H 15
Temperature (≥ 15°):	19-09 °C	Humidity (≤ 75%):	65-08 %

Shot Blasting Self Inspection

Interior of Cabin: Sa 1 - Light Stripping	Confirmed	Yes	✓	No	
When examined with the naked eye, the surface free of any trace of oil, grease and dirt, and from poorly adhering materials such as scale, rust, paint and foreign particles.	Confirmed	Yes	✓	No	
Exterior of Cabin: Sa 2 1/2 - Very Thorough Stripping	Confirmed	Yes	✓	No	
	Confirmed	Yes	✓	No	
Operator: DAVID	Sign:				
Date: 2024/04/03					

Shot Blasting Cleaning

Cabin free of all sand	Confirmed	Yes	✓	No	
Operator: DAVID	Sign:				
Date: 2024/04/03					

Shot Blasting Control

Temperature ≥ 15°:	20-02 °C	Humidity ≤ 75%:	68-02 %
Internal Roughness 3.2 ≤ Ra ≤ 12.5	10.462	External Roughness 3.2 ≤ Ra ≤ 12.5	8.565
QC Inspector: Leon	Sign:		
Date: 03/04/24			

Record of Priming

Start Time:	13:00	End Time:	15:00
Temperature ≥ 15°:	25°C	Humidity ≤ 75%:	68%
Paint Batch No.:	8016059	Paint Expiry Date:	08/25
Hardener Batch No.:	7332119	Hardener Expiry Date:	01-11-24
Desolvation Start Time:	15:00	Desolvation End Time:	15:15
Stoving Start Time:	15:15	Stoving End Time:	16:15
Stoving Temp:	60°C		
Operator:	[illegible]	Sign:	[illegible]
Date:	2024/04/03		

Priming Control

DFT Interior RHS		DFT Interior LHS		DFT Floor		DFT Interior Front	
1: 72.5	5: 75.5	1: 46.8	5: 61.9	1: 78	5: 47.5	1: 80.6	5: 52.3
2: 68.9	6: 60.8	2: 68.1	6: 55.7	2: 44.0	6: 50.4	2: 38.4	6: 68.5
3: 48.3	7: 63.2	3: 36.0	7: 73.8	3: 41.7	7: 79.2	3: 63.9	7: 43.0
4: 81.9	8: 59.7	4: 62.5	8: 65.4	4: 54.9	8: 69.3	4: 73.6	8: 55.7
Min:	48.3	Min:	36.0	Min:	41.7	Min:	38.4
Max:	81.9	Max:	73.8	Max:	79.7	Max:	80.6
Average:	68.1	Average:	58.8	Average:	58.1	Average:	59.5

DFT Interior Roof		DFT Exterior LHS		DFT Exterior RHS		DFT Underside	
1: 69.3	5: 69.9	1: 56.5	5: 70.7	1: 52.6	5: 48.8	1: 50.1	5: 45.4
2: 32.2	6: 56.2	2: 82.0	6: 65.1	2: 61.4	6: 55.1	2: 67.8	6: 59.4
3: 71.3	7: 88.6	3: 71.8	7: 58.2	3: 47.8	7: 54.8	3: 56.0	7: 49.7
4: 84.9	8: 45.4	4: 53.1	8: 33.5	4: 48.2	8: 64.4	4: 38.6	8: 56.8
Min:	32.2	Min:	33.5	Min:	47.8	Min:	38.6
Max:	84.9	Max:	82.0	Max:	64.4	Max:	56.0
Average:	64.7	Average:	56.9	Average:	54.1	Average:	52.9

DFT Exterior Front		DFT Exterior Roof		DFT Machined Base		DFT Machined Top RHS/LHS	
1: 67.7	5: 43.2	1: 52.6	5: 70.7	1: 83.3	5: 64.5	1: 44.8	5: 40.1
2: 80.2	6: 69.3	2: 35.9	6: 49.6	2: 41.4	6: 60.1	2: 41.8	6: 61.8
3: 76.5	7: 38.2	3: 77.1	7: 46.4	3: 68.5	7: 57.0	3: 50.9	7: 77.2
4: 31.9	8: 74.3	4: 82.8	8: 85.9	4: 74.2	8: 37.5	4: 64.1	8: 63.4
Min:	38.2	Min:	35.9	Min:	41.4	Min:	40.1
Max:	80.2	Max:	85.9	Max:	83.3	Max:	77.2
Average:	66.1	Average:	62.6	Average:	60.8	Average:	47.7

Primer has been inspected and is free of defects		Confirmed	Yes	✓	No
QC Inspector:	Zothile	Sign:	[illegible]		
Date:	03 Apr 2024				

Record of Painting NCSS3010 R90B			
Start Time:	23:00	End Time:	23:30
Temperature ≥ 15°:	27°C	Humidity ≤ 75%:	51%
Paint Batch No.:	8156903	Paint Expiry Date:	23-01-25
Hardener Batch No.:	752021/5121	Hardener Expiry Date:	12-24
Desolvation Start Time:	23:30	Desolvation End Time:	23:45
Stoving Start Time:	23:45	Stoving End Time:	00:45
Stoving Temp:	60°C		
Operator:	Mtutuzeko	Sign:	nnshangase
Date:	2024/04/03		

Painting NCSS3010 R90B Control				
DFT Interior Door Aperture RHS		DFT Interior Door Aperture LHS		GMS-SOS-GIBELA-PS-001 Adhesion Test (attach test tape)
1: 125	5: 131	1: 104	5: 142	
2: 124	6: 128	2: 163	6: 147	
3: 94.8	7: 123	3: 125	7: 121	
4: 118	8: 120	4: 155	8: 100	
Min:	94.8	Min:	100	
Max:	131	Max:	163	
Average:	120	Average:	132	

Painting NCSS3010 R90B has been inspected and is free of defects	Confirmed	Yes	✓	No
GMS-SOS-GIBELA-PS-002 Gloss Test	Value			
QC Inspector: Zothile ~~05 Apr 2024~~	Sign:			
Date: 05 Apr 2024				

Record of Painting Blue NCSS1565 B			
Start Time:	03:00	End Time:	03:30
Temperature ≥ 15°:	25°C	Humidity ≤ 75%:	62%
Paint Batch No.:	81763138	Paint Expiry Date:	02-01-25
Hardener Batch No.:	7502115121	Hardener Expiry Date:	12/24
Desolvation Start Time:	03:30	Desolvation End Time:	03:45
Stoving Start Time:	03:45	Stoving End Time:	04:45
Stoving Temp:	60°C		
Operator:	Ntuthuko	Sign:	Nshangase
Date:	2024/04/04		

Painting Blue NCSS1565 B Control				
DFT Exterior Door Aperture RHS		DFT Exterior Door Aperture LHS		GMS-SOS-GIBELA-PS-001 Adhesion Test (attach test tape)
1: 84.9	5: 104	1: 137	5: 129	
2: 92.1	6: 101	2: 108	6: 131	
3: 81.6	7: 118	3: 126	7: 146	
4: 112	8: 123	4: 98.8	8: 122	
Min:	81.6	Min:	98.8	
Max:	123	Max:	146	
Average:	91.5	Average:	124	

Painting NCSS3010 R90B has been inspected and is free of defects	Confirmed	Yes	✓	No
GMS-SOS-GIBELA-PS-002 Gloss Test	Value			
QC Inspector: Zothile	Sign:			
Date: 05 Apr 2026				

Record of RAL 7012

Start Time:	10:15	End Time:	12:15
Temperature ≥ 15°:	24°C	Humidity ≤ 75%:	64%
Paint Batch No.:	8156853	Paint Expiry Date:	06-02-25
Hardener Batch No.:	8131592113	Hardener Expiry Date:	11/26
Desolvation Start Time:	12:15	Desolvation End Time:	12:30
Stoving Start Time:	12:30	Stoving End Time:	13:30
Stoving Temp:	60°C		
Operator:	Musa	Sign:	Musa
Date:	2024/04/04		

RAL 7012 Control

DFT Interior RHS		DFT Interior LHS		DFT Floor		DFT Interior Front	
1: 94.6	5: 102	1: 91.5	5: 135	1: 96.0	5: 113	1: 91.1	5: 102
2: 118	6: 113	2: 137	6: 146	2: 101	6: 124	2: 84.7	6: 118
3: 90.8	7: 124	3: 102	7: 119	3: 84.8	7: 92.6	3: 98.6	7: 129
4: 89.5	8: 110	4: 128	8: 126	4: 126	8: 133	4: 104	8: 137
Min:	89.5	Min:	91.5	Min:	84.8	Min:	84.7
Max:	118	Max:	146	Max:	133	Max:	137
Average:	105	Average:	123	Average:	108	Average:	108

DFT Interior Roof		DFT Exterior LHS		DFT Exterior RHS		DFT Underside	
1: 129	5: 85.7	1: 127	5: 118	1: 96.5	5: 144	1: 138	5: 145
2: 114	6: 104	2: 139	6: 97.4	2: 87.6	6: 127	2: 126	6: 128
3: 96.0	7: 89.2	3: 102	7: 120	3: 165	7: 137	3: 114	7: 140
4: 119	8: 107	4: 100	8: 103	4: 152	8: 131	4: 136	8: 812
Min:	85	Min:	97.4	Min:	87.6	Min:	812
Max:	129	Max:	139	Max:	165	Max:	145
Average:	105	Average:	113	Average:	130	Average:	126

DFT Exterior Front		DFT Exterior Roof		GMS-SOS-GIBELA-PS-001 Adhesion Test
1: 119	5: 158	1: 133	5: 154	
2: 121	6: 146	2: 143	6: 148	
3: 130	7: 122	3: 167	7: 141	
4: 137	8: 120	4: 159	8: 139	
Min:	119	Min:	133	
Max:	158	Max:	167	
Average:	131	Average:	129	

Painting NCSS3010 R90B has been inspected and is free of defects	Confirmed	Yes	✓	No	
GMS-SOS-GIBELA-PS-002 Gloss Test	Value				
QC Inspector:	Zothile	Sign:			
Date:	06 Apr 2024				

SEALING OF CABIN

All areas where there is no welding has been sealed with SIKA	Confirmed	YES	✓	NO	
All sealants have been neatly applied along joints	Confirmed	YES	✓	NO	

SIGN OFF

CLOCK No:	2400	OPERATOR SIGN:	Apkule	DATE:	05/04/2024

CABIN WAXING							
CABIN IS WAXED						Confirmed	YES ✓ NO
SIGN OFF							
CLOCK No.	2400	OPERATOR SIGN	APWle	DATE	05/04/2024		

Request for Weld Repair

No.:	Date:	WI/SOS No.:	Weld No.:	WPS used for Repair	Wire batch No.	Signature of Approval	Signature of Operator
	20YY/MM/DD						
	20YY/MM/DD						
	20YY/MM/DD						
	20YY/MM/DD						
	20YY/MM/DD						
	20YY/MM/DD						
	20YY/MM/DD						
	20YY/MM/DD						
	20YY/MM/DD						
	20YY/MM/DD						
	20YY/MM/DD						
	20YY/MM/DD						
	20YY/MM/DD						
	20YY/MM/DD						
	20YY/MM/DD						
	20YY/MM/DD						
	20YY/MM/DD						
	20YY/MM/DD						
	20YY/MM/DD						
	20YY/MM/DD						
	20YY/MM/DD						
	20YY/MM/DD						
	20YY/MM/DD						
	20YY/MM/DD						
	20YY/MM/DD						
	20YY/MM/DD						
	20YY/MM/DD						
	20YY/MM/DD						
	20YY/MM/DD						

REWORK IDENTIFICATION

(MARK SECTIONS EFFECTED NUMERICALLY)

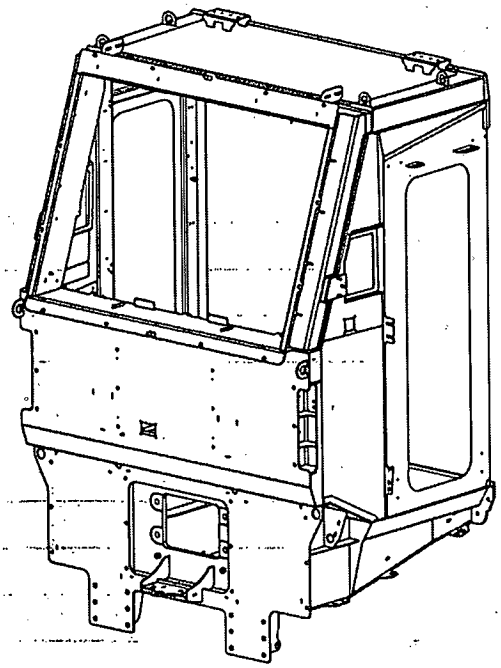

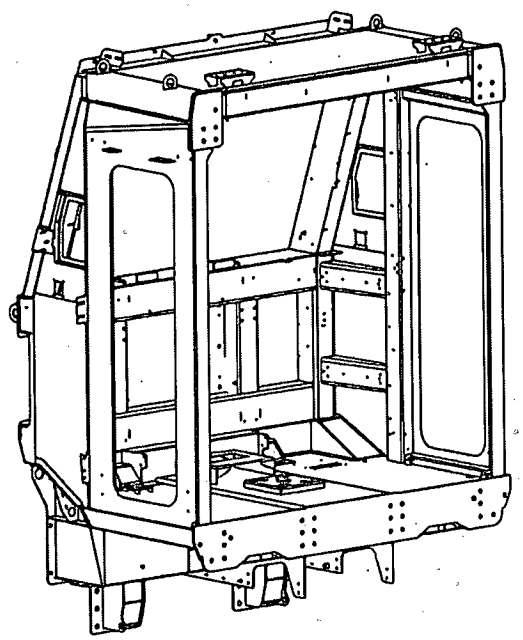

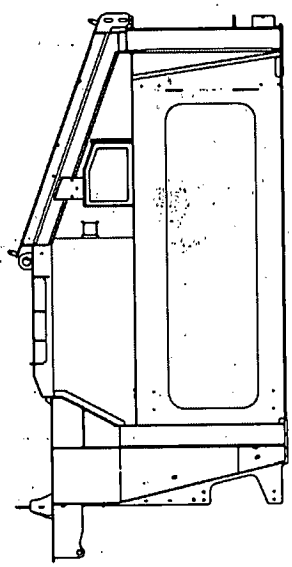

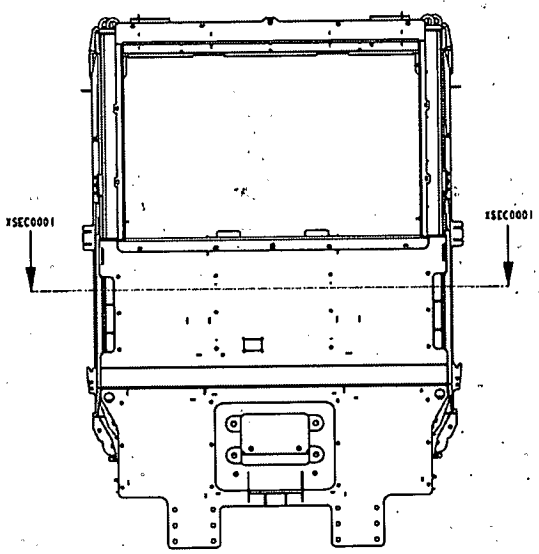

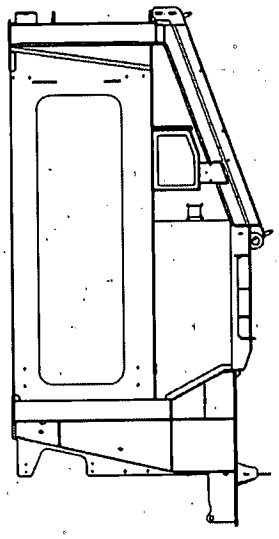

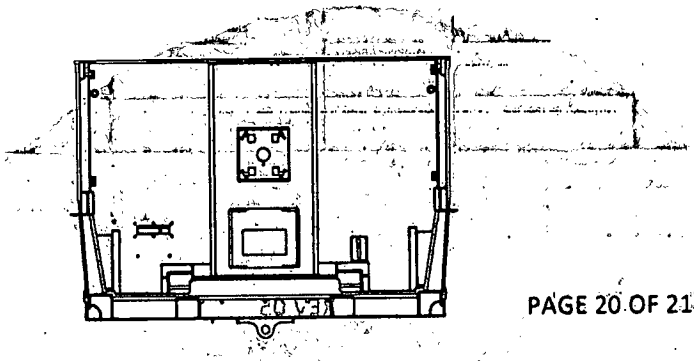

FAULT TRACKING

DESCRIPTION	LOCATION ON CAB	REWORKED BY (COMPANY NUMBER)	QC VALIDATED

REMINDERS / COMMENTS

DEPARTMENT	DETAILS OR COMMENT

CABIN STRUCTURE QUALITY HOT CHECKLIST

Running No.:		Updated By:	Jonathan Chetty
Frame No.:	448	Checks Updated:	2022/08/26

Disposition Key:		
	0	Pass
	x	Fail (Concession required)
	Δ	Rework required

No.	Description of inspection	Disposition	Validation after rework		Sign
			Repairer	Disposition	
1	WELDS ARE CLOSED	0			
2	NO PIN HOLES ON CAB STRUCTURE	0			
3	SEALANT IS APPLIED CORRECTLY • JOINTS ARE CLOSED • NO BREAKS IN THE SEALANT • CORRECT BEAD	0			
4	RIVET NUTS ARE PROPERLY CRIMPED • RIVETS ARE MARKED • CORRECT GRIP RANGE USED	0			
5	NO MISS WELDS PRESENT AFTER SANDBLASTING	0			
6	NO VISUAL MISS WELDS (INSPECTION AFTER SEALING)	0			
7					
8					
9					
10					
11					
12					
13					
14					

Quality approval for release Signature	CO NO:	DATE
[illegible]	2291	08/04/24